-3

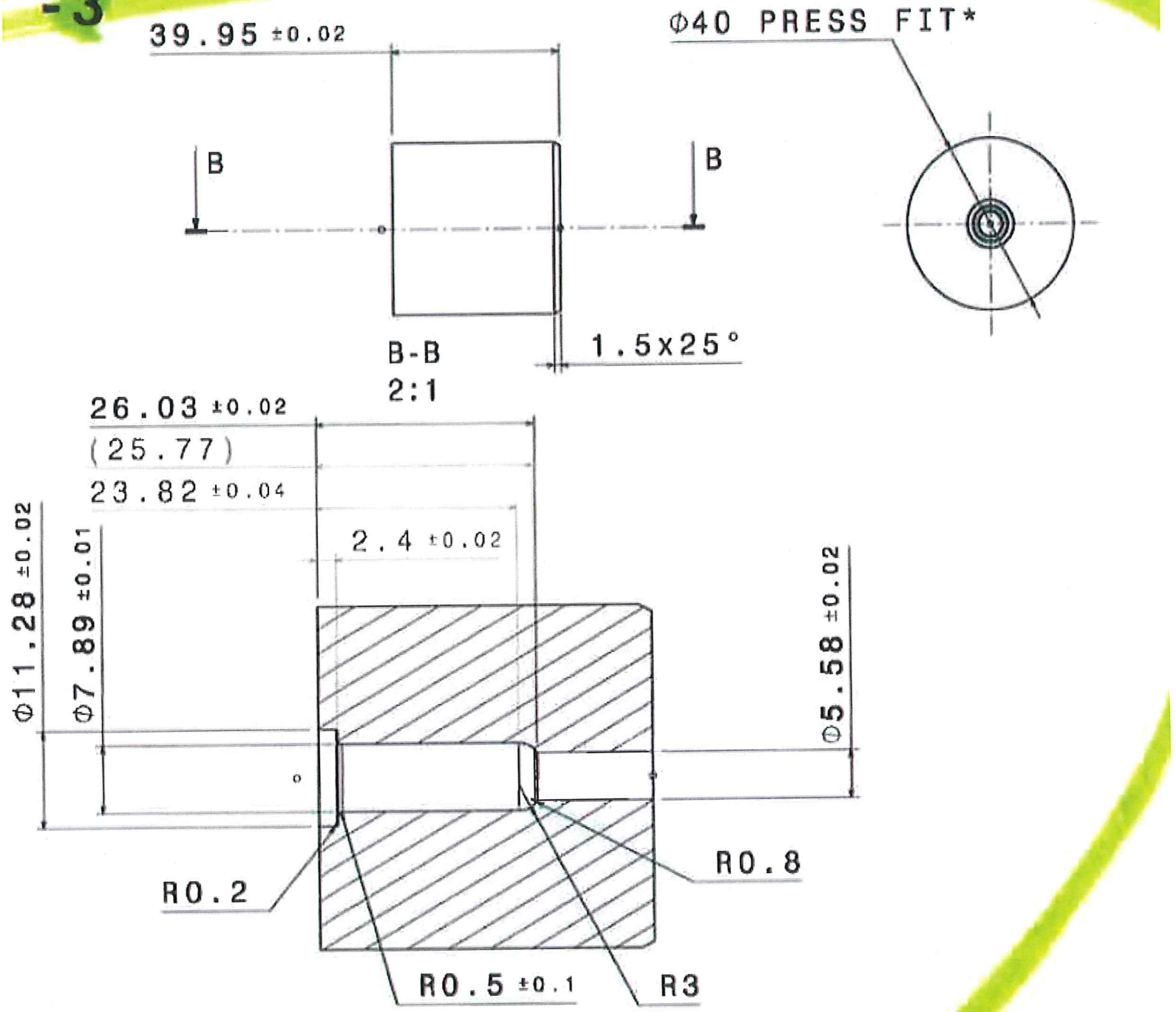

* CERAMIC RING OUTSIDE DIAMETER TO BE DONE IN 'OVERDIMENS